macchine edili ed agricole

DIECI

Agri Star 38.10

Agri Star 38.10

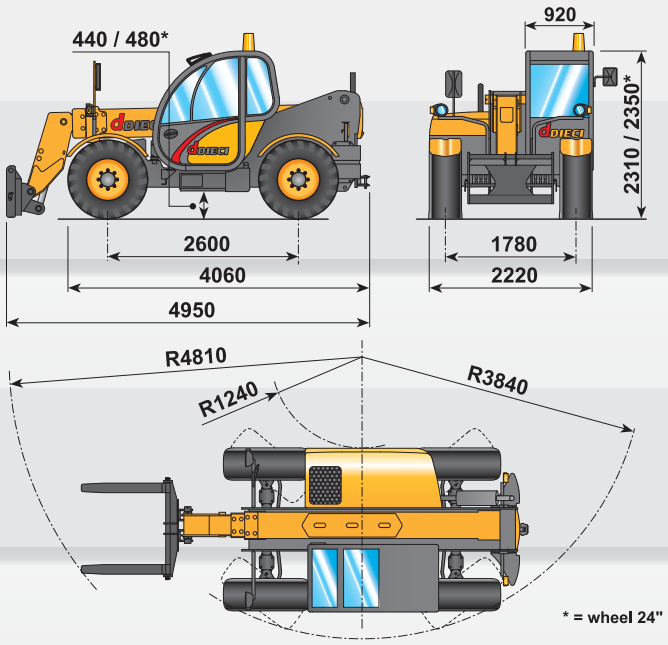

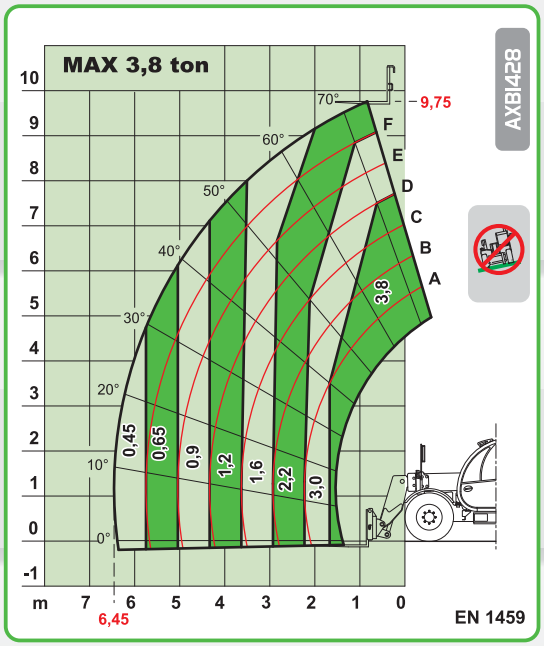

PERFORMANCES

Maximum capacity:..... 3.800 kg
Capacity at maximum height on tyres:..... 2.200 kg
Capacity at maximum boom extension on tyres:..... 450 kg
Maximum lifting height on tyres:..... 9,75 m
Maximum horizontal boom extension:..... 6,45 m
Boom extension at maximum height:..... 0,84 m
Fork tilting angle:..... 130°
Tearing force:..... 5.700 daN
Towing force:..... 7.300 daN
Maximum allowable slope:..... 40 %
Total empty weight:..... 7.800 kg
Max speed:..... 30 km/h
(on request 40 km/h with TC and TA engine)

TRANSMISSION

Transmission:..... hydrostatic with variable delivery pump
Hydraulic engine:..... with automatic adjustment
Reversing gear:..... electro - hydraulic
Inching pedal for controlled forward movement.
Servocontrolled 2 speed gearbox.

HYDRAULIC SYSTEM

Gear pump with capacity at max speed:.....100 lt/1'
Max working pressure:..... 230 bar
Control valve with joystick:..... 3 in 1

DIFFERENTIAL AXLES

Steering axles:..... 2, with planetary reduction gears
Type of steering:..... 4 wheels / transversal / 2 wheels
Front axle:..... rigid (levelling on request)
Rear axle:..... oscillating
Service brake:..... oil bath on the front axle with servo-brake
Negative parking brake

OPTIONAL AND ACCESSORIES

Optional and Accessories:..... see the relevant catalogue

ENGINE

IVECO NEF F4GE0454A - TC - 74 kW ENGINE
Maximum power:..... 74 kW (102 hp) at 2300 rpm
Operating principle:..... four-stroke, diesel engine
Cylinder number and layout:..... 4, vertical in line
Displacement:..... 4485 cm^3 - Turbo compressor
Cooling system:..... liquid

IVECO NEF - TA - 93 kW ENGINE (Tier 3)
Maximum net power:..... 93 kW (127 HP) at 2200 rpm
Operating principle:..... four-stroke, diesel engine
Number of cylinders and layout:..... 4, vertical in line
Displacement:.....4485 cm^3 - Aftercooler turbo compressor
Cooling system:..... liquid

REFUELLING (litre)

Hydraulic tank:..... 140
Fuel tank:..... 95

STANDARD DEVICES

Anti-tipping device with block for hazardous movements.
Hydraulic socket for possible accessories on boom head.
Closed soundproof ROPS - FOPS approved driver's cab, with heating.
Self-locking differential on front axle (limited slip 45%).

TYRES

Tyres:..... 16/70x20"
Alternative:..... 16/70x24"

TOWING CAPACITY (on request)

Unbraked trailer:..... 3 ton
Mechanical braking:..... 5 ton
Hydraulic/pneumatic brake:
TC engine ..... 17.5 ton
TA engine ..... 20 ton
40km/h speed included

The information contained in this publication is merely indicative; the models described may be modified, without notice, by the manufacturer, drawings and photographs may refer to optional or particular equipment for other countries. For any further information, please contact DIECI premises at the address given below.

macchine edili ed agricole
DIECI S.r.l.
DIECI S.r.l.
Via E. Majorana, 2-4 - 42027 Montecchio Emilia (RE)
Tel. +39 0522 869611 - Fax +39 0522 869744
www.dieci.com - info@dieci.com

(Cod. AXE3143/UK - 1/2009 v0)